有刷电机--BD53-60, 60W

适配行星减速箱--Planetary gearbox available
适配涡轮蜗杆减速箱--Worm gearbox available
适配制动器--Brake available
适配控制器--Controller available
适配编码器--Encoder available
更多客户要求--More request from customer

- 额定功率60瓦有刷直流电机
- 可根据需求定制不同电压的绕组
- 可根据需求提供不同尺寸的前轴和尾轴
- 电机轴使用滚珠轴承
- 防护等级为IP50，可根据需求提供更高的等级
- 长寿命，免维护，绝缘等级E

- Brush type DC motor in nominal power 60W
- Special voltage windings available on request
- Different shaft size available for both sides on request
- Motor shaft with ball bearing
- Protection class IP50, higher class available on request
- Longer lifetime, maintenance-free, insulation class E

24V数据和曲线--Data and curve of 24V

额定电压 Nominal voltage	24 VDC	转矩常数 Torque constant	6.2 Ncm A^{-1}
额定电流 Nominal current	2.9 A	终端电阻 Terminal resistance	1.05 Ω
额定转矩 Nominal torque	17 Ncm	终端电感 Terminal inductance	4.7 mH
额定转速 Nominal speed	3000 rpm	空载电流 No load current	0.2 A
堵转扭矩 Stall torque	143 Ncm	转子惯量 Rotor inertial	460 gcm^2
空载转速 No load speed	3250 rpm	电机重量 Weight of motor	1.16 kg

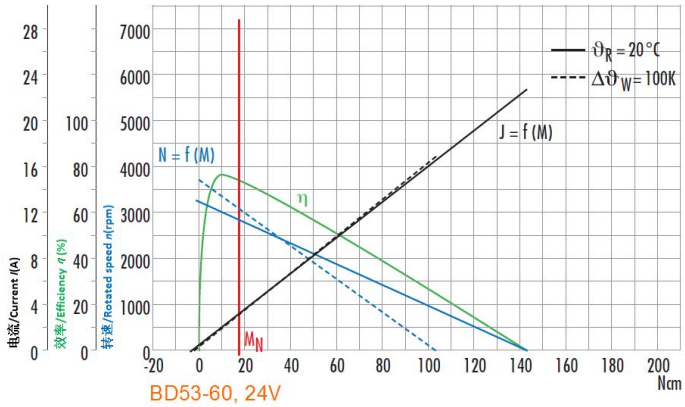

BD53-60, 24V
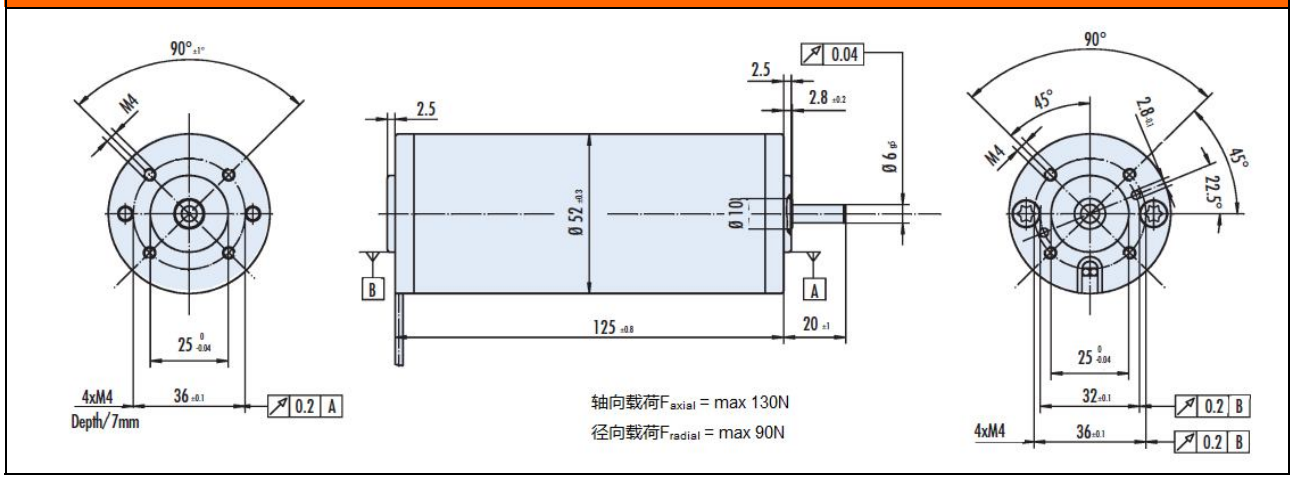
尺寸为毫米-Dimensions in mm